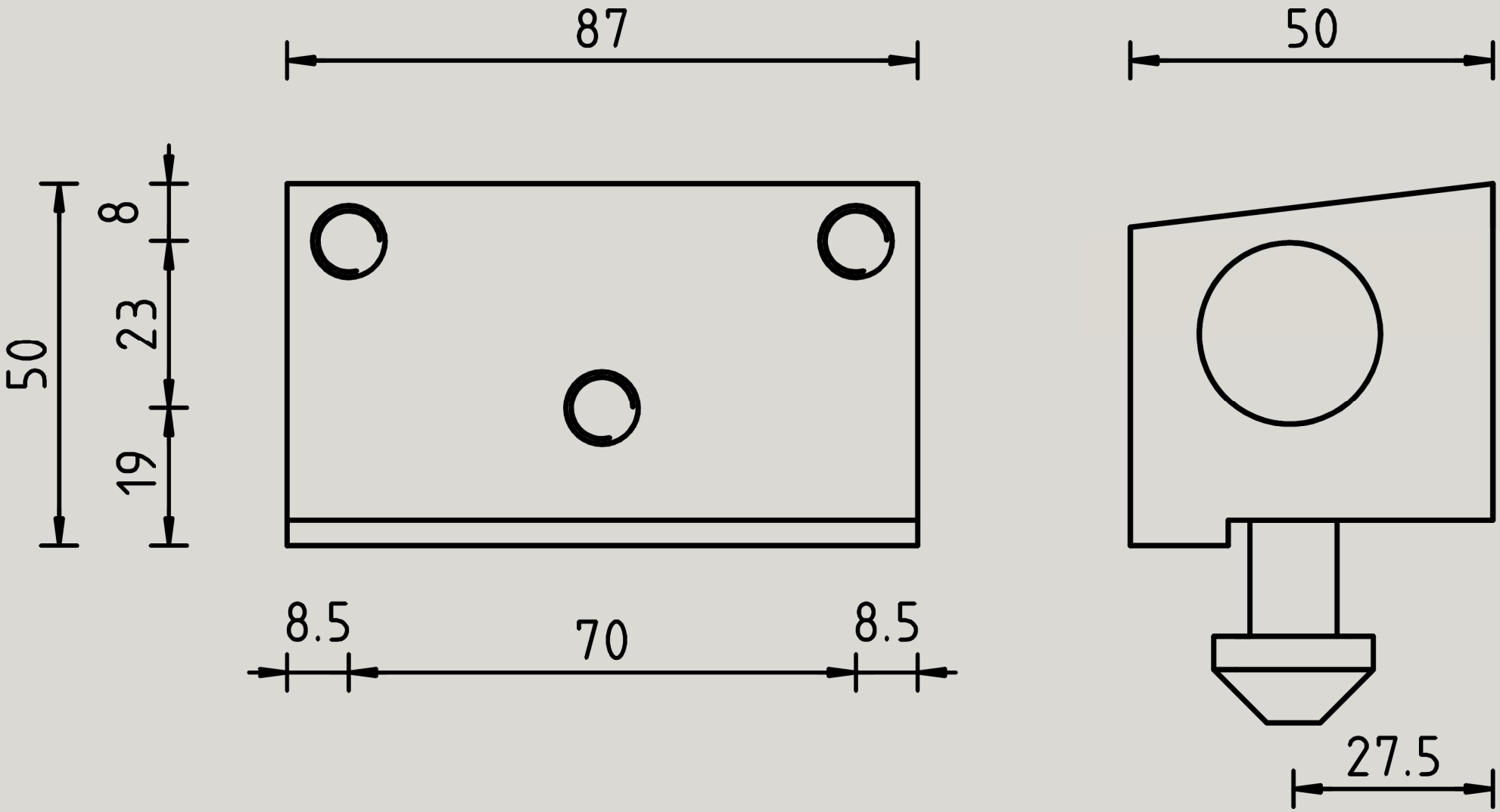
87
50
8
23
50
19
8.5
70
8.5
27.5